MVE STANDARD RANGE

2 POLES – 3000/3600 rpm

*

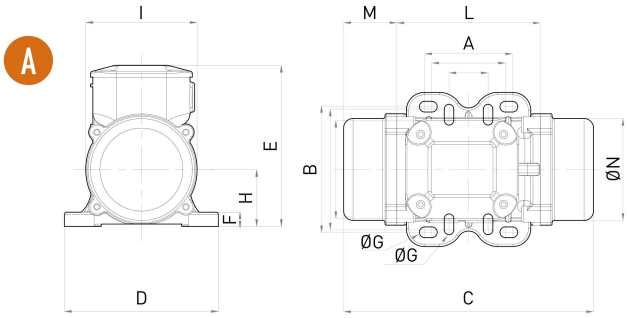

* *Image referred to size 50*

Wm (kgcm)		Model		Centrifugal Force (kg)		Weight (kg)		ELECTRICAL SPECIFICATIONS: Input Power (kW)		Nominal Current A max. (Y)		Ia / In		Cable Gland	CERTIFICATE: Class II Div.2	II3D
50Hz	60Hz	50Hz	60Hz	50Hz	60Hz	50Hz	60Hz	50Hz	60Hz	50Hz (400V)	60Hz (460V)	50Hz	60Hz	Metric	Temp. Class	Temp. Class
1	1	MVE 60/3	MVE 60/36	66	71	4		0.1	0.1	0.2	0.2	3.0	3.0	M16	T4	100 °C
2	1	MVE 100/3	MVE 100/36	98	95	5		0.1	0.1	0.2	0.2	3.0	3.0	M16	T4	100 °C
4	3	MVE 200/3	MVE 200/36	187	189	7		0.2	0.2	0.3	0.3	3.3	3.3	M20	T4	100 °C
4	3	MVE 202/3	MVE 202/36	187	189	7		0.2	0.2	0.3	0.3	3.3	3.3	M20	T4	100 °C
6	4	MVE 300/3	MVE 300/36	321	323	10		0.3	0.3	0.5	0.4	3.6	3.5	M20	T4	100 °C
8	6	MVE 400/3	MVE 400/36	407	411	10		0.3	0.4	0.6	0.6	3.5	3.5	M20	T4	100 °C
10	7	MVE 500/3	MVE 500/36	530	534	16		0.5	0.6	1.0	1.0	4.0	4.2	M20	T4	100 °C
15	11	MVE 700/3	MVE 700/36	758	765	16		0.7	0.7	1.2	1.2	4.3	5.0	M20	T4	100 °C
16	11	MVE 800/3	MVE 800/36	794	800	21		0.7	0.9	1.4	1.5	3.8	3.8	M20	T4	100 °C
20	16	MVE 1200/3	MVE 1200/36	1,005	1,013	22		0.9	1.1	1.8	1.9	4.4	4.5	M20	T4	100 °C
27	19	MVE 1300/3	MVE 1300/36	1,355	1,365	22		1.3	1.4	2.4	2.2	5.2	5.0	M20	T4	100 °C
27	19	MVE 1301/3	MVE 1301/36	1,355	1,365	34		1.3	1.4	2.4	2.2	5.2	5.0	M20	T4	100 °C
22	22	MVE 1310/3	MVE 1310/36	1,123	1,616	34		1.3	1.4	2.4	2.2	5.2	5.0	M20	T4	100 °C
31	22	MVE 1600/3	MVE 1600/36	1,601	1,608	52	51	1.6	1.6	2.9	2.6	5.9	6.2	M25	T4	135 °C
37	28	MVE 2000/3	MVE 2000/36	2,027	1,997	53	52	2.0	2.1	3.7	3.4	6.5	6.4	M25	T4	135 °C
46	32	MVE 2300/3	MVE 2300/36	2,302	2,306	54	52	2.4	2.4	4.4	3.9	6.0	6.3	M25	T4	135 °C
68	44	MVE 3200/3	MVE 3200/36	3,252	3,176	103	101	2.9	2.9	5.3	4.6	8.3	8.2	M32	T4	135 °C
79	56	MVE 4000/3	MVE 4000/36	4,033	4,052	107	104	2.9	2.9	5.3	4.6	8.5	9.7	M32	T4	135 °C
103	70	MVE 5000/3	MVE 5000/36	5,009	5,048	111	106	4.0	4.0	7.2	6.3	8.5	9.8	M32	T4	135 °C
										A max. (Δ)						
129	90	MVE 6500/3	MVE 6500/36	6,510	6,552	228	230	5.5	5.0	9.5	8.0	8.5	8.8	M32	T4	135 °C
180	129	MVE 9000/3	MVE 9000/36	9,025	9,375	240	235	10.0	9.0	14.0	18.0	8.4	8.6	M32	T4	135 °C

UP TO SIZE 60 (NOT INCLUDED)
60Hz masses = 50Hz masses adjusted at 70%

ABOVE SIZE 60 (INCLUDED)
Specific masses for 60Hz

To convert kg into Newton: N = 9.81 · kg

» Declaration of conformity "type B" according to: 2014/35/UE - 2006/42/EC - EN 60034-1

» Class II Div.2 Group F, G - T4 -
» Conform to UL 1836, UL1004-1 Cert. CSA C22.2 N. 25, 100, 145
» NEMA 4*
* Sizes from 100 to 110 not included

B

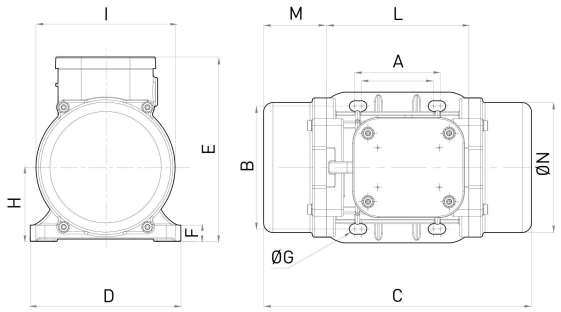

C

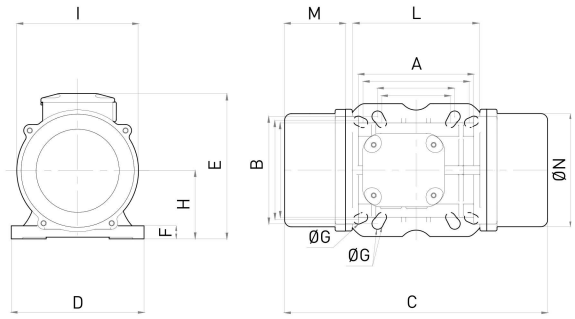

D

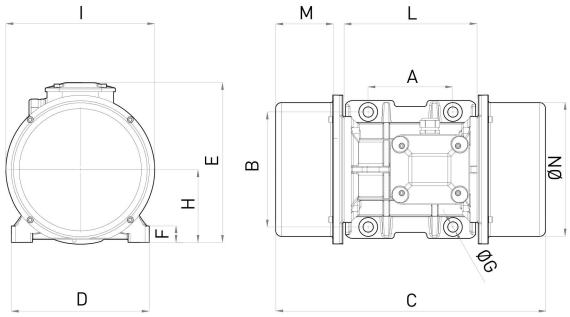

G

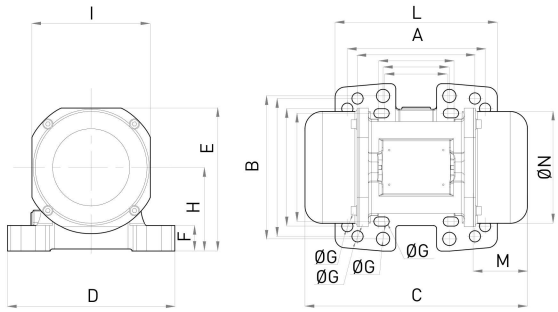

DIMENSIONAL SPECIFICATIONS (mm)

Model 50Hz	Model 60Hz	Drawing	Size	C 50Hz	C 60Hz	M 50Hz	M 60Hz	A	B	Ø G	Holes N°	D	E	F	H	I	L	N
MVE 60/3	MVE 60/36	A	10	211		45		Multiple Footprint			4	130	136	12	48	94	121	85
								62-74	106	9								
MVE 100/3	MVE 100/36	A	10	211		45		33	83-102	7	4	130	136	12	48	94	121	85
MVE 200/3	MVE 200/36	B	20	231		54		62-74	106	9	4	131	159	15	64	121	123	112
MVE 202/3	MVE 202/36	G	23	218		53		Multiple Footprint			4	164	140	25	82	116	159	110
								62-74	106	9								
								65	140	13								
								115	135	11								
								135	115	11								
MVE 300/3	MVE 300/36	C	30	253		45		Multiple Footprint			4	154	175	15	79	142	163	131
								80	110	11								
								90	125	13								
MVE 400/3	MVE 400/36	C	30	273		55		124	110	11	4	154	175	15	79	142	163	131
								135	115	11								
MVE 500/3	MVE 500/36	D	40	334		78		105	140	13	4	168	196	22	92	169	178	158
MVE 700/3	MVE 700/36	D	40	334		78		105	140	13	4	168	196	22	92	169	178	158
MVE 800/3	MVE 800/36	D	50	321		58		120	170	17	4	208	210	22	94	180	205	170
MVE 1200/3	MVE 1200/36	D	50	321		58		120	170	17	4	208	210	22	94	180	205	170
MVE 1300/3	MVE 1300/36	D	50	321		58		120	170	17	4	208	210	22	94	180	205	170
MVE 1301/3	MVE 1301/36	D	53	321		58		100	180	17	4	236	210	26	98	180	205	170
MVE 1310/3	MVE 1310/36	D	55	321		58		100	200	17	4	236	210	26	98	180	205	170
MVE 1600/3	MVE 1600/36	D	60	418		83		140	190	17	4	229	262	30	120	247	220	222
MVE 2000/3	MVE 2000/36	D	60	418		83		140	190	17	4	229	262	30	120	247	220	222
MVE 2300/3	MVE 2300/36	D	60	418		83		140	190	17	4	229	262	30	120	247	220	222
MVE 3200/3	MVE 3200/36	D	75	538		115		155	255	25	4	302	318	35	147	295	273	264
MVE 4000/3	MVE 4000/36	D	75	538		115		155	255	25	4	302	318	35	147	295	273	264
MVE 5000/3	MVE 5000/36	D	75	588	538	140	115	155	255	25	4	302	318	35	147	295	273	264
MVE 6500/3	MVE 6500/36	D	85	605		120		200	320	28	4	378	411	49	199	424	325	378
MVE 9000/3	MVE 9000/36	D	85	605		120		200	320	28	4	378	411	49	199	424	325	378

NOTE: Dimensions with coarse degree of accuracy related to UNI 22768/1

This information is provided without warranty, representation, inducement or licence of any kind. It is accurate to the best OLI knowledge or is obtained from sources believed to be accurate. OLI therefore assumes no legal responsibility.

MVE STANDARD RANGE

4 POLES - 1500/1800 rpm

*

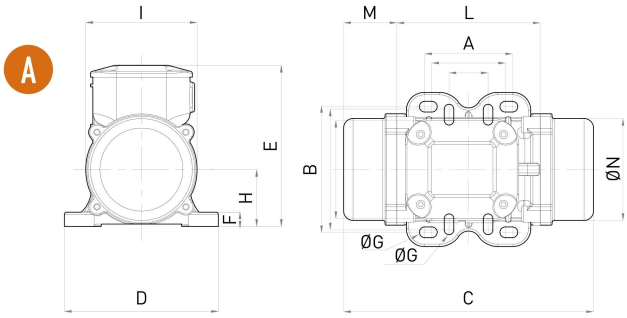

* *Image referred to size 90*

Wm (kgcm)		Model		Centrifugal Force (kg)		Weight (kg)		ELECTRICAL SPECIFICATIONS Input Power (kW)		Nominal Current A max. (Y)		Ia / In		Cable Gland	CERTIFICATE Class II Div.2	II3D
50Hz	60Hz	50Hz	60Hz	50Hz	60Hz	50Hz	60Hz	50Hz	60Hz	50Hz (400V)	60Hz (460V)	50Hz	60Hz	Metric	Temp. Class	Temp. Class
2	2	MVE 40/15	MVE 40/18	25	36	5		0.04	0.05	0.3	0.3	2.0	2.0	M16	T4	100 °C
6	4	MVE 90/15	MVE 90/18	75	76	7		0.1	0.1	0.3	0.3	3.5	3.8	M20	T4	100 °C
15	11	MVE 200/15	MVE 200/18	194	196	12		0.2	0.2	0.5	0.5	2.0	2.0	M20	T4	100 °C
33	23	MVE 400/15	MVE 400/18	420	423	19		0.3	0.3	0.8	0.9	2.5	2.5	M20	T4	100 °C
40	28	MVE 500/15	MVE 500/18	504	508	21		0.3	0.4	1.1	1.1	2.8	2.7	M20	T4	100 °C
27	19	MVE 300/15	MVE 300/18	334	336	22		0.6	0.7	1.3	1.4	3.0	3.2	M20	T4	100 °C
57	39	MVE 700/15	MVE 700/18	714	712	27		0.6	0.7	1.3	1.4	3.0	3.2	M20	T4	100 °C
89	62	MVE 1100/15	MVE 1100/18	1,114	1,122	36	28	0.6	0.8	1.5	1.7	3.8	3.8	M20	T4	100 °C
109	77	MVE 1400/15	MVE 1400/18	1,364	1,388	60	58	0.9	1.1	1.7	1.8	4.0	4.0	M25	T4	135 °C
137	92	MVE 1700/15	MVE 1700/18	1,725	1,664	62	59	1.1	1.3	2.2	2.1	4.7	4.5	M25	T4	135 °C
188	137	MVE 2400/15	MVE 2400/18	2,358	2,485	68	62	1.6	1.9	3.0	3.2	4.9	4.9	M25	T4	135 °C
203	136	MVE 2500/15	MVE 2500/18	2,557	2,454	90	84	1.8	2.0	3.4	3.4	6.0	6.1	M25	T4	135 °C
249	170	MVE 3000/15	MVE 3000/18	3,124	3,071	97	87	1.9	2.3	3.7	3.8	6.5	6.6	M25	T4	135 °C
307	205	MVE 3800/15	MVE 3800/18	3,853	3,704	130	118	2.2	2.6	4.1	4.1	6.8	6.8	M32	T4	135 °C
343	241	MVE 4300/15	MVE 4300/18	4,312	4,359	134	124	2.5	3.0	5.7	5.8	7.0	7.2	M32	T4	135 °C
437	304	MVE 5500/15	MVE 5500/18	5,495	5,495	192	190	3.6	3.4	6.5	6.6	7.1	7.0	M32	T4	135 °C
										A max. (Δ)						
577	397	MVE 7200/15	MVE 7200/18	7,246	7,188	253	247	5.0	6.0	9.6	9.4	6.8	6.9	M32	T4	135 °C
718	499	MVE 9000/15	MVE 9000/18	9,020	9,023	269	258	7.5	8.5	12.0	12.0	7.0	7.0	M32	T4	135 °C
800	588	MVE 10000/15	MVE 10000/18	10,052	10,643	312	297	7.8	9.4	13.0	13.0	6.5	6.4	M32	T4	135 °C
939	655	MVE 11500/15	MVE 11500/18	11,779	11,853	445	422	9.0	10.0	15.5	15.5	7.0	7.0	M32	-	135 °C
1,142	838	MVE 14500/15	MVE 14500/18	14,352	15,153	460	442	11.0	13.0	18.5	18.5	8.0	8.0	M32	-	135 °C

UP TO SIZE 60 (NOT INCLUDED)
60Hz masses = 50Hz masses adjusted at 70%
Except for model MVE 1100/15 - 1100/18

ABOVE SIZE 60 (INCLUDED)
Specific masses for 60Hz

To convert kg into Newton: N = 9.81 · kg

» Declaration of conformity "type B" according to: 2014/35/UE - 2006/42/EC - EN 60034-1

» Class II Div.2 Group F, G - T4 -
» Conform to UL 1836, UL1004-1 Cert. CSA C22.2 N. 25, 100, 145
» NEMA 4*
* Sizes from 100 to 110 not included

B

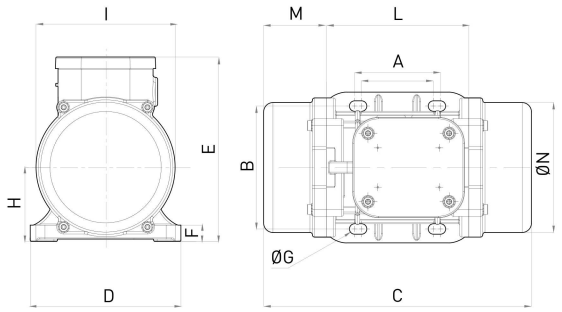

C

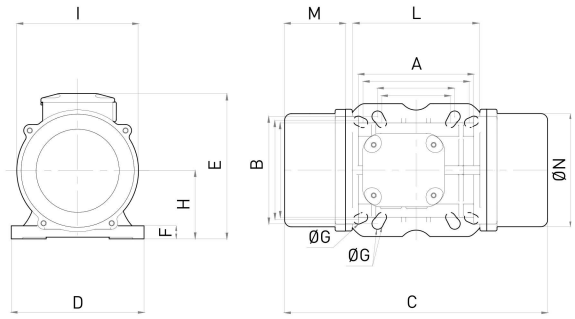

D

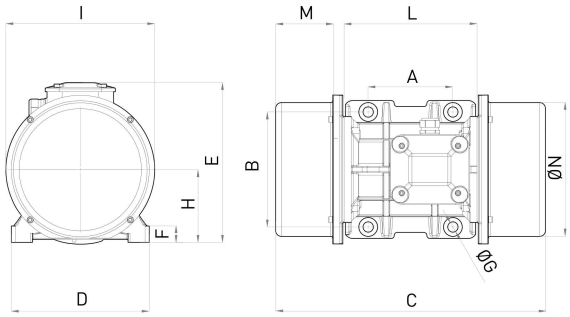

E

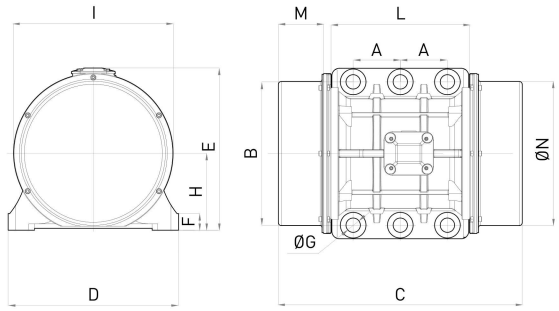

Model		Drawing	Size	DIMENSIONAL SPECIFICATIONS (mm)														
				C		M		A	B	Ø G	Holes	D	E	F	H	I	L	N
50Hz	60Hz			50Hz	60Hz	50Hz	60Hz				N°							
MVE 40/15	MVE 40/18	A	10	211		45		Multiple Footprint 62 - 74 33	106 83-102	9 7	4	130	136	12	48	94	121	85
MVE 90/15	MVE 90/18	B	20	231		54		62-74	106	9	4	131	159	15	64	121	123	112
MVE 200/15	MVE 200/18	C	30	273		55		Multiple Footprint 80 90 124 135	110 125 110 115	11 13 11 11	4	154	175	15	79	142	163	131
MVE 400/15	MVE 400/18	D	40	334		78		105	140	13	4	168	196	22	92	169	178	158
MVE 500/15	MVE 500/18	D	40	334		78		105	140	13	4	168	196	22	92	169	178	158
MVE 300/15	MVE 300/18	D	50	321		58		120	170	17	4	208	210	22	94	180	205	170
MVE 700/15	MVE 700/18	D	50	391		93		120	170	17	4	208	210	22	94	180	205	170
MVE 1100/15	MVE 1100/18	D	50	451	391	123	93	120	170	17	4	208	210	22	94	180	205	170
MVE 1400/15	MVE 1400/18	D	60	446		96		140	190	17	4	229	262	30	120	247	220	222
MVE 1700/15	MVE 1700/18	D	60	446		96		140	190	17	4	229	262	30	120	247	220	222
MVE 2400/15	MVE 2400/18	D	60	510	446	129	96	140	190	17	4	229	262	30	120	247	220	222
MVE 2500/15	MVE 2500/18	D	70	522	486	123	105	155	225	22	4	272	295	40	140	267	250	235
MVE 3000/15	MVE 3000/18	D	70	522	486	123	105	155	225	22	4	272	295	40	140	267	250	235
MVE 3800/15	MVE 3800/18	D	75	588	538	140	115	155	255	23.5	4	302	318	35	147	295	273	264
MVE 4300/15	MVE 4300/18	D	75	588		140		155	255	23.5	4	302	318	35	147	295	273	264
MVE 5500/15	MVE 5500/18	D	80	603		130		180	280	26	4	332	360	37	167	345	304	310
MVE 7200/15	MVE 7200/18	D	85	608		120		200	320	28	4	378	411	49	200	424	325	378
MVE 9000/15	MVE 9000/18	D	85	608		120		200	320	28	4	378	411	49	200	424	325	378
MVE 10000/15	MVE 10000/18	E	90	726	646	160	120	125	380	39	6	452	430	44	204	422	367	378
MVE 11500/15	MVE 11500/18	E	100	890		210		140	440	45	6	530	484	37	232	446	470	424
MVE 14500/15	MVE 14500/18	E	100	890		210		140	440	45	6	530	484	37	232	446	470	424

NOTE: Dimensions with coarse degree of accuracy related to UNI 22768/1

This information is provided without warranty, representation, inducement or licence of any kind. It is accurate to the best OLI knowledge or is obtained from sources believed to be accurate. OLI therefore assumes no legal responsibility.

MVE STANDARD RANGE

6 POLES - 1000/1200 rpm

*1 *Image referred to size 105*

*2 *Image referred to size 30*

Wm (kgcm)		Model		Centrifugal Force (kg)		Weight (kg)		ELECTRICAL SPECIFICATIONS							CERTIFICATE	
								Input Power (kW)		Nominal Current A max. (Y)		Ia / In		Cable Gland	Class II Div.2	II3D
50Hz	60Hz	50Hz	60Hz	50Hz	60Hz	50Hz	60Hz	50Hz	60Hz	50Hz (400V)	60Hz (460V)	50Hz	60Hz	Metric	Temp. Class	Temp. Class
9	7	MVE 50/1	MVE 50/12	53	53	10		0.1	0.1	0.4	0.5	2.0	2.0	M20	T4	100 °C
19	13	MVE 100/1	MVE 100/12	105	106	12		0.1	0.1	0.4	0.5	2.0	2.0	M20	T4	100 °C
33	23	MVE 200/1	MVE 200/12	187	188	20		0.2	0.2	0.5	0.5	2.0	2.0	M20	T4	100 °C
57	40	MVE 300/1	MVE 300/12	318	320	27		0.3	0.4	0.7	0.6	2.5	2.5	M20	T4	100 °C
92	64	MVE 500/1	MVE 500/12	513	517	34		0.3	0.4	1.2	1.1	2.0	2.7	M20	T4	100 °C
92	92	MVE 510/1	MVE 510/12	513	739	34		0.3	0.4	1.2	1.1	2.8	2.7	M20	T4	100 °C
137	109	MVE 800/1	MVE 800/12	767	873	62	59	0.7	0.8	1.4	1.3	3.2	3.1	M25	T4	135 °C
188	137	MVE 1100/1	MVE 1100/12	1,048	1,104	79	73	0.7	0.8	1.4	1.3	3.2	3.1	M25	T4	135 °C
285	196	MVE 1500/1	MVE 1500/12	1,590	1,580	84	76	1.1	1.3	2.1	2.0	3.3	3.3	M25	T4	135 °C
300	203	MVE 1600/1	MVE 1600/12	1,673	1,636	100	89	1.1	1.3	2.8	3.2	3.7	3.6	M25	T4	135 °C
373	249	MVE 2100/1	MVE 2100/12	2,083	2,000	114	100	1.5	1.8	3.0	3.0	4.3	4.4	M25	T4	135 °C
467	307	MVE 2600/1	MVE 2600/12	2,610	2,466	147	131	2.0	2.1	3.6	3.4	4.8	4.8	M32	T4	135 °C
540	380	MVE 3000/1	MVE 3000/12	3,017	3,053	155	138	2.2	2.4	4.5	4.3	5.0	5.0	M32	T4	135 °C
940	658	MVE 5210/1	MVE 5210/12	5,237	5,290	225	191	3.8	4.0	6.9	6.4	5.5	5.5	M25	T4	135 °C
680	437	MVE 3800/1	MVE 3800/12	3,799	3,517	216	195	2.5	3.0	4.7	4.9	5.9	6.0	M32	T4	135 °C
838	584	MVE 4700/1	MVE 4700/12	4,681	4,697	231	212	3.2	3.9	6.5	6.0	5.5	5.7	M32	T4	135 °C
930	655	MVE 5200/1	MVE 5200/12	5,192	5,263	280	264	3.8	4.0	6.9	6.4	5.5	5.5	M32	T4	135 °C
1165	824	MVE 6500/1	MVE 6500/12	6,506	6,625	304	281	4.3	5.0	7.8	7.8	6.2	6.0	M32	T4	135 °C
										A max. (Δ)						
1,436	930	MVE 8000/1	MVE 8000/12	8,018	7,476	325	290	7.1	7.5	12.6	11.6	6.0	6.2	M32	T4	135 °C
1600	1,165	MVE 9000/1	MVE 9000/12	8,936	9,369	338	308	7.5	8.3	13.2	12.6	6.3	6.2	M32	T4	135 °C
1,788	1,240	MVE 10000/1	MVE 10000/12	9,986	9,970	386	359	7.6	8.0	13.5	12.7	6.4	6.4	M32	T4	135 °C
2,330	1,647	MVE 13000/1	MVE 13000/12	13,009	13,246	422	376	10.0	10.0	17.0	16.0	6.2	6.3	M32	T4	135 °C
2,253	1,550	MVE 12000/1	MVE 12000/12	12,580	12,466	522	476	8.0	9.5	15.0	15.0	5.0	5.5	M32	-	135 °C
2,634	1,856	MVE 15000/1	MVE 15000/12	14,706	14,923	672	630	10.1	12.0	18.0	18.0	5.8	5.8	M32	-	135 °C
3,220	2,147	MVE 17500/1	MVE 17500/12	17,980	17,264	744	684	11.9	14.2	21.0	21.0	5.6	5.9	M32	-	135 °C
3,632	2,525	MVE 19500/1	MVE 19500/12	20,285	20,299	768	728	12.0	14.5	24.0	24.0	5.4	5.6	M32	-	135 °C
4,067	2,622	MVE 22000/1	MVE 22000/12	22,711	21,079	916	868	13.9	17.0	28.0	28.0	4.8	5.3	M32	-	135 °C
4,572	3,163	MVE 25000/1	MVE 25000/12	25,532	25,432	994	937	13.9	17.0	28.0	28.0	4.8	5.3	M32	-	135 °C

UP TO SIZE 60 (NOT INCLUDED)
60Hz masses = 50Hz masses adjusted at 70%

ABOVE SIZE 60 (INCLUDED)
Specific masses for 60Hz

To convert kg into Newton: N = 9.81 · kg

» Declaration of conformity "type B" according to: 2014/35/UE - 2006/42/EC - EN 60034-1

» Class II Div.2 Group F, G - T4 -
» Conform to UL 1836, UL1004-1 Cert. CSA C22.2 N. 25, 100, 145
» NEMA 4*
* Sizes from 100 to 110 not included

C

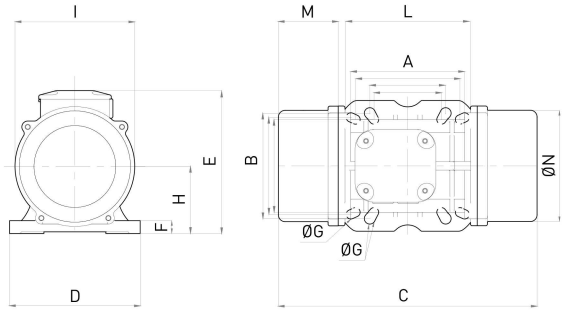

D

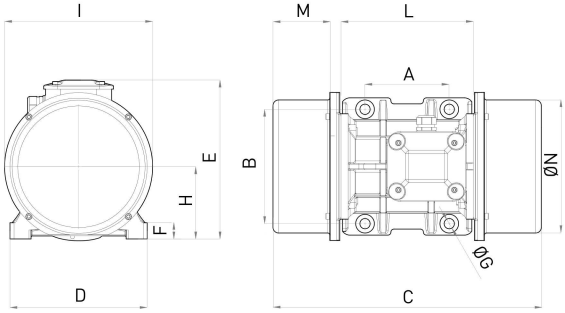

E

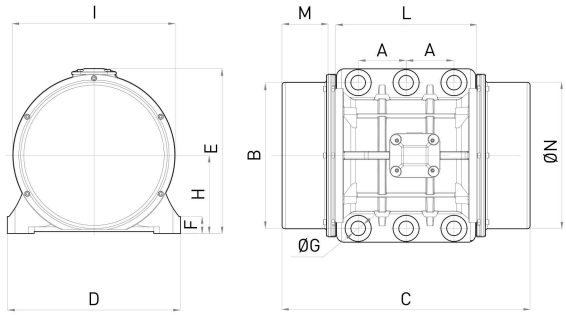

H

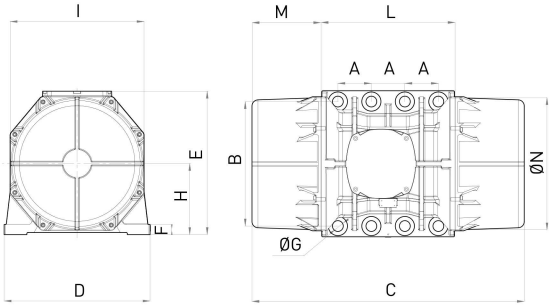

Model 50Hz	Model 60Hz	Drawing	Size	C 50Hz	C 60Hz	M 50Hz	M 60Hz	A	B	Ø G	Holes N°	D	E	F	H	I	L	N
				DIMENSIONAL SPECIFICATIONS (mm)														
MVE 50/1	MVE 50/12	C	30	273		55		Multiple Footprint: 80 / 90 / 124 / 135	110 / 125 / 110 / 115	11 / 13 / 11 / 11	4	154	175	15	79	142	163	131
MVE 100/1	MVE 100/12	C	30	303		70					4	154	175	15	79	142	163	131
MVE 200/1	MVE 200/12	D	40	334		78		105	140	13	4	168	196	22	92	169	178	158
MVE 300/1	MVE 300/12	D	50	391		93		120	170	17	4	208	210	22	94	180	205	170
MVE 500/1	MVE 500/12	D	50	451		123		120	170	17	4	208	210	22	94	180	205	170
MVE 510/1	MVE 510/12	D	50	451		123		120	170	17	4	208	210	22	94	180	205	170
MVE 800/1	MVE 800/12	D	60	446		96		140	190	17	4	229	262	30	120	247	220	222
MVE 1100/1	MVE 1100/12	D	60	510	446	129	96	140	190	17	4	229	262	30	120	247	220	222
MVE 1500/1	MVE 1500/12	D	60	562	510	154	129	140	190	17	4	229	262	30	120	247	220	222
MVE 1600/1	MVE 1600/12	D	70	556	522	140	123	155	225	22	4	272	295	40	140	267	250	235
MVE 2100/1	MVE 2100/12	D	70	616	556	170	140	155	225	22	4	272	295	40	140	267	250	235
MVE 2600/1	MVE 2600/12	D	75	708	588	200	140	155	255	23.5	4	302	318	35	147	295	273	264
MVE 3000/1	MVE 3000/12	D	75	708	608	200	150	155	255	23.5	4	302	318	35	147	295	273	264
MVE 5210/1	MVE 5210/12	E	78	794		242		105	248	22	6	300	335	30	163	305	310	284
MVE 3800/1	MVE 3800/12	D	80	683	603	170	130	180	280	26	4	332	360	37	167	345	304	310
MVE 4700/1	MVE 4700/12	D	80	733	683	195	170	180	280	26	4	332	360	37	167	345	304	310
MVE 5200/1	MVE 5200/12	D	85	688	605	160	120	200	320	28	4	378	411	49	200	424	325	378
MVE 6500/1	MVE 6500/12	D	85	688		160		200	320	28	4	378	411	49	200	424	325	378
MVE 8000/1	MVE 8000/12	D	85	788	688	210	160	200	320	28	4	378	411	49	200	424	325	378
MVE 9000/1	MVE 9000/12	D	85	788	688	210	160	200	320	28	4	378	411	49	200	424	325	378
MVE 10000/1	MVE 10000/12	E	90	826		210		125	380	39	6	452	430	44	204	422	367	378
MVE 13000/1	MVE 13000/12	E	90	926	826	260	210	125	380	39	6	452	430	44	204	422	367	378
MVE 12000/1	MVE 12000/12	E	100	1,020		275		140	440	45	6	530	484	37	232	446	470	424
MVE 15000/1	MVE 15000/12	H	105	980		210		140	480	45	8	570	542	48	268	510	560	490
MVE 17500/1	MVE 17500/12	H	105	1,060		250		140	480	45	8	570	542	48	268	510	560	490
MVE 19500/1	MVE 19500/12	H	105	1,060		250		140	480	45	8	570	542	48	268	510	560	490
MVE 22000/1	MVE 22000/12	H	110	1,130		285		140	520	45	8	610	594	42	297	560	560	530
MVE 25000/1	MVE 25000/12	H	110	1,130		285		140	520	45	8	610	594	42	297	560	560	530

NOTE: Dimensions with coarse degree of accuracy related to UNI 22768/1

This information is provided without warranty, representation, inducement or licence of any kind. It is accurate to the best OLI knowledge or is obtained from sources believed to be accurate. OLI therefore assumes no legal responsibility.

MVE STANDARD RANGE

8 POLES - 750/900 rpm

*1

*2

*1 *Image referred to size 110* *2 *Image referred to size 40*

Wm (kgcm)		Model		Centrifugal Force (kg)		Weight (kg)		ELECTRICAL SPECIFICATIONS							CERTIFICATE	
								Input Power (kW)		Nominal Current **A max. (Y)**		Ia / In		Cable Gland	Class II Div.2	II3D
50Hz	60Hz	50Hz	60Hz	50Hz	60Hz	50Hz	60Hz	50Hz	60Hz	50Hz (400V)	60Hz (460V)	50Hz	60Hz	Metric	Temp. Class	Temp. Class
33		MVE 150/075	MVE 150/090	105	151	21		0.2	0.2	1.1	1.1	1.5	1.5	M20	T4	100 °C
57		MVE 250/075	MVE 250/090	179	257	29		0.3	0.4	1.1	1.1	1.7	1.7	M20	T4	100 °C
84		MVE 400/075	MVE 400/090	264	380	35		0.3	0.4	1.1	1.1	1.9	1.9	M20	T4	100 °C
137		MVE 650/075	MVE 650/090	431	621	65		0.5	0.6	1.2	1.2	2.2	2.2	M25	T4	135 °C
188		MVE 900/075	MVE 900/090	589	849	71		0.6	0.8	1.2	1.3	2.5	2.5	M25	T4	135 °C
300		MVE 1300/075	MVE 1300/090	941	1,355	100		1.2	1.1	2.5	1.8	3.0	3.0	M25	T4	135°C
467		MVE 2100/075	MVE 2100/090	1,468	2,114	150		1.5	1.8	2.8	2.9	4.2	4.1	M32	T4	135 °C
680		MVE 3100/075	MVE 3100/090	2,137	3,077	212		2.0	2.3	3.8	3.8	4.0	4.0	M32	T4	135 °C
838		MVE 3800/075	MVE 3800/090	2,633	3,792	230		2.5	3.0	6.0	6.0	3.9	4.0	M32	T4	135 °C
930		MVE 4200/075	MVE 4200/090	2,920	4,205	284		2.9	3.4	6.5	6.5	3.8	3.7	M32	T4	135 °C
1,165		MVE 5300/075	MVE 5300/090	3,660	5,270	305		4.0	4.3	8.5	8.0	3.8	4.2	M32	T4	135 °C
1,436		MVE 6500/075	MVE 6500/090	4,510	6,494	324		5.0	5.9	10.0	10.0	3.6	4.0	M32	T4	135 °C
										A max. (Δ)						
2,200		MVE 10000/075	MVE 10000/090	6,911	9,952	422		6.8	7.5	13.5	12.5	3.5	4.2	M32	T4	135 °C
2,835	2,553	MVE 12000/075	MVE 12000/090	8,904	11,546	571	553	7.5	8.0	13.5	13.5	3.8	4.0	M32	-	135 °C
3,713	3,220	MVE 14000/075	MVE 14000/090	11,661	14,563	751	725	9.0	10.6	19.0	19.0	4.5	5.0	M32	-	135 °C
4,401	3,920	MVE 17000/075	MVE 17000/090	13,822	17,729	812	792	9.1	11.0	20.0	20.0	5.3	5.8	M32	-	135 °C
5,857	4,999	MVE 22000/075	MVE 22000/090	18,395	22,610	982	937	13.8	16.5	28.0	28.0	5.6	5.2	M32	-	135 °C
-	5,857	NA	MVE 26000/090	-	26,489	-	982	-	16.5	-	28.0	-	5.2	M32	-	135 °C

UP TO SIZE 90 (INCLUDED)
60Hz masses = 50Hz masses adjusted at 100%

ABOVE SIZE 90 (NOT INCLUDED)
Specific masses for 60Hz

To convert kg into Newton: N = 9.81 · kg

» Declaration of conformity "type B" according to:
2014/35/UE - 2006/42/EC - EN 60034-1

» Class II Div.2 Group F, G - T4 -
» Conform to UL 1836, UL1004-1 Cert. CSA C22.2 N. 25, 100, 145
» NEMA 4*
* Sizes from 100 to 110 not included

D

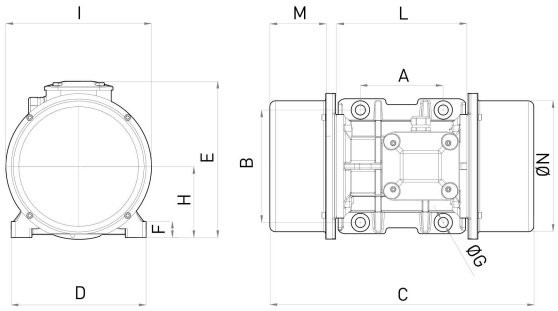

E

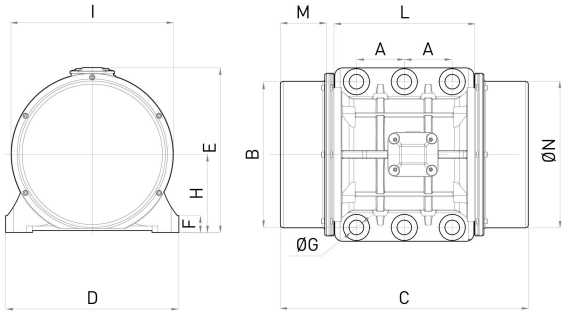

H

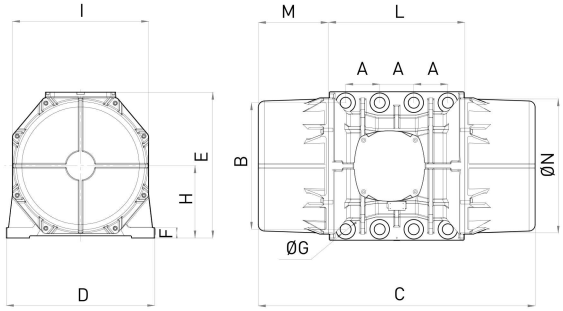

Model		Drawing	Size	DIMENSIONAL SPECIFICATIONS (mm)															
				C		M		A	B	Ø G	Holes	D	E	F	H	I	L	N
50Hz	60Hz			50Hz	60Hz	50Hz	60Hz				N°							
MVE 150/075	MVE 150/090	D	40	334		78		105	140	13	4	168	196	22	92	169	178	158
MVE 250/075	MVE 250/090	D	50	391		93		120	170	17	4	208	210	22	94	180	205	170
MVE 400/075	MVE 400/090	D	50	451		123		120	170	17	4	208	210	22	94	180	205	170
MVE 650/075	MVE 650/090	D	60	446		96		140	190	17	4	229	262	30	120	247	220	222
MVE 900/075	MVE 900/090	D	60	510		129		140	190	17	4	229	262	30	120	247	220	222
MVE 1300/075	MVE 1300/090	D	70	556		140		155	225	22	4	272	295	40	140	267	250	235
MVE 2100/075	MVE 2100/090	D	75	708		200		155	255	23.5	4	302	318	35	147	295	273	264
MVE 3100/075	MVE 3100/090	D	80	683		170		180	280	26	4	332	360	37	167	345	304	310
MVE 3800/075	MVE 3800/090	D	80	733		195		180	280	26	4	332	360	37	167	345	304	310
MVE 4200/075	MVE 4200/090	D	85	688		160		200	320	28	4	378	410	49	199	422	325	378
MVE 5300/075	MVE 5300/090	D	85	688		160		200	320	28	4	378	410	49	199	422	325	378
MVE 6500/075	MVE 6500/090	D	85	788		210		200	320	28	4	378	410	49	199	422	325	378
MVE 10000/075	MVE 10000/090	E	90	926		260		125	380	39	6	452	430	44	204	422	367	378
MVE 12000/075	MVE 12000/090	E	100	1,020		275		140	440	45	6	530	484	37	232	446	470	424
MVE 14000/075	MVE 14000/090	H	105	1,060		250		140	480	45	8	570	542	48	268	510	560	490
MVE 17000/075	MVE 17000/090	H	105	1,120		280		140	480	45	8	570	542	48	268	510	560	490
MVE 22000/075	MVE 22000/090	H	110	1,130		285		140	520	45	8	610	594	42	297	560	560	530
NA	MVE 26000/090	H	110	1,130		285		140	520	45	8	610	594	42	297	560	560	530

NOTE: Dimensions with coarse degree of accuracy related to UNI 22768/1

This information is provided without warranty, representation, inducement or licence of any kind. It is accurate to the best OLI knowledge or is obtained from sources believed to be accurate. OLI therefore assumes no legal responsibility.

MVE STANDARD RANGE

2 POLES SINGLE-PHASE - 3000/3600 rpm

*1 *Image referred to size 20*

Wm (kgcm)		Model		Centrifugal Force (kg)		Weight (kg)		ELECTRICAL SPECIFICATIONS									CERTIFICATE	
								Input Power (kW)		Nominal Current A max		Ia / In		Cable Gland	Capacitor *		Class II Div.2	II3D
50Hz	60Hz	50Hz	60Hz	50Hz	60Hz	50Hz	60Hz	50Hz	60Hz	50Hz (230V)	60Hz (115V)	50Hz	60Hz	Metric	50Hz (230V)	60Hz (115V)	Temp. Class	Temp. Class
1	1	MVE 60/3M		66	71	4		0.1	0.1	0.4	3.0	3.0	3.0	M16	3 µF	6,3 µF	T4	100 °C
2	1	MVE 100/3M		98	95	5		0.1	0.1	0.5	3.0	3.0	3.0	M16	4 µF	8 µF	T4	100 °C
4	3	MVE 200/3M		187	189	7		0.2	0.2	1.1	3.3	3.3	3.3	M20	8 µF	16 µF	T4	100 °C
4	3	MVE 202/3M		187	189	7		0.2	0.2	1.1	3.3	3.3	3.3	M20	8 µF	16 µF	T4	100 °C
6	4	MVE 300/3M		321	323	10		0.3	0.3	1.6	3.5	3.6	3.5	M20	12,5 µF	25 µF	T4	100 °C

** NOTE: Capacitor not supplied with vibrator (to be ordered separately)*

To convert kg into Newton: N = 9.81 · kg

» Declaration of conformity "type B" according to: 2014/35/UE - 2006/42/EC - EN 60034-1

» Class II Div.2 Group F, G - T4 -
» Conform to UL 1836, UL1004-1 Cert. CSA C22.2 N. 25, 100, 145
» NEMA 4*
* Sizes from 100 to 110 not included

A

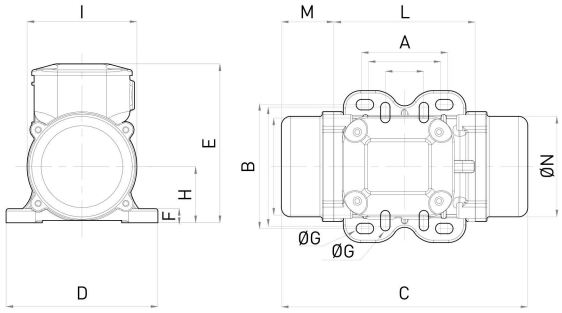

B

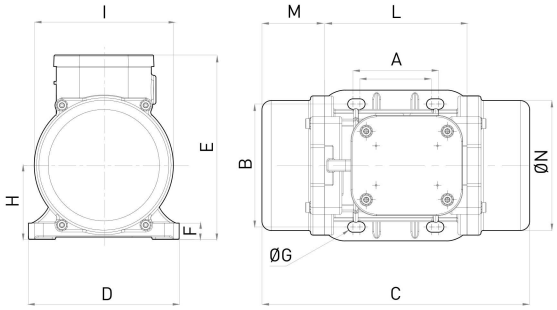

C

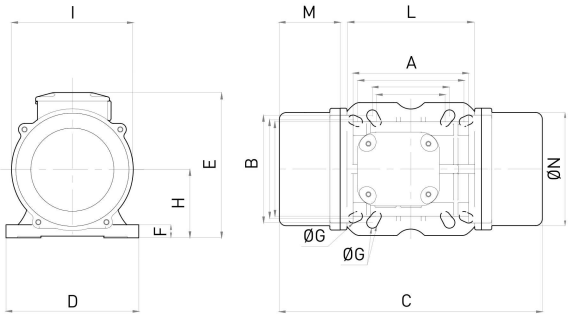

G

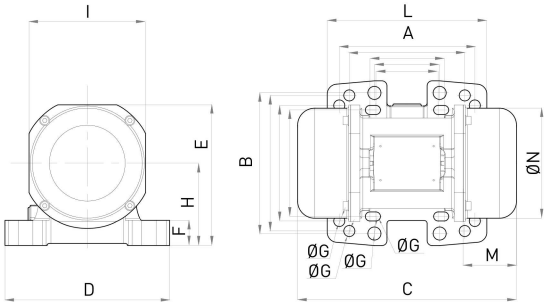

Model 50Hz	Model 60Hz	Drawing	Size	C 50Hz	C 60Hz	M 50Hz	M 60Hz	A	B	Ø G	Holes N°	D	E	F	H	I	L	N
				DIMENSIONAL SPECIFICATIONS (mm)														
MVE 60/3M		A	10	211		45		Multiple Footprint			4	130	136	12	48	94	121	85
								62-74	106	9								
MVE 100/3M		A	10	211		45		33	83-102	7	4	130	136	12	48	94	121	85
MVE 200/3M		B	20	231		54		62-74	106	9	4	131	159	15	64	121	123	112
MVE 202/3M		G	23	218		53		Multiple Footprint			4	164	140	25	82	116	159	110
								62-74	106	9								
								65	140	13								
								115	135	11								
								135	115	11								
MVE 300/3M		C	30	273		55		Multiple Footprint			4	154	175	15	79	142	163	131
								80	110	11								
								90	125	13								
								124	110	11								
								135	115	11								

NOTE: Dimensions with coarse degree of accuracy related to UNI 22768/1

This information is provided without warranty, representation, inducement or licence of any kind. It is accurate to the best OLI knowledge or is obtained from sources believed to be accurate. OLI therefore assumes no legal responsibility.

MVE STANDARD RANGE

MICRO – 3000/3600 rpm

THREE-PHASE

Wm (kgcm)		Model		Centrifugal Force (kg)		Weight (kg)		ELECTRICAL SPECIFICATIONS: Input Power (kW)		Nominal Current A max			Cable Gland	CERTIFICATE: For 60Hz Class II Div.2	For 50Hz II3D
50Hz	60Hz	50Hz	60Hz	50Hz	60Hz	50Hz	60Hz	50Hz	60Hz	50Hz (230V)	50Hz (400V)	60Hz (460V)	Metric	Temp. Class	Temp. Class
0.4	0.4	MICRO 21		20	29	2		0.04	0.04	0.2	0.1	0.1	M16	T4	100 °C
1	1	MICRO 41		45	65	2		0.1	0.1	0.3	0.2	0.2	M16	T4	100 °C

SINGLE-PHASE

Wm (kgcm)		Model		Centrifugal Force (kg)		Weight (kg)		ELECTRICAL SPECIFICATIONS: Input Power (kW)		Nominal Current A max		Cable Gland *	CERTIFICATE: For 60Hz Class II Div.2	For 50Hz II3D
50Hz	60Hz	50Hz	60Hz	50Hz	60Hz	50Hz	60Hz	50Hz	60Hz	50Hz (230V)	60Hz (115V)	Metric	Temp. Class	Temp. Class
0.1	0.1	MICRO 3 M		4	6	1.6		0.03	0.04	0.3	0.8	M16	T4	100 °C
0.1	0.1	MICRO 6 M		6	9	1.6		0.03	0.04	0.3	0.8	M16	T4	100 °C
0.4	0.4	MICRO 21 M		20	29	2		0.04	0.1	0.2	0.8	M16	T4	100 °C
1	1	MICRO 41 M		45	65	2.4		0.05	0.1	0.2	0.8	M16	T4	100 °C

NOTE: Capacitor integrated in the cable

To convert kg into Newton: N = 9.81 · kg

F

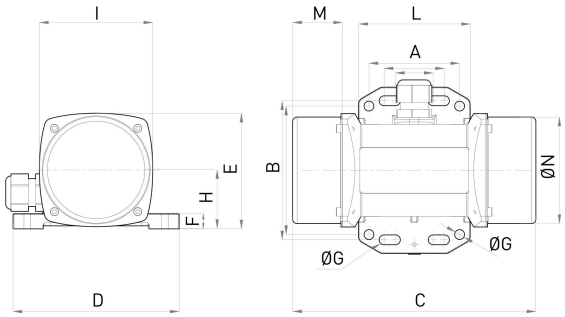

I

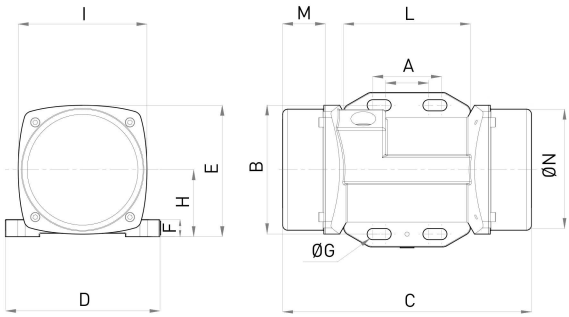

Model		Drawing	DIMENSIONAL SPECIFICATIONS (mm)												
			C	M	A	B	Ø G	Holes	D	E	F	H	I	L	N
50Hz	60Hz		50Hz	50Hz				N°							
MICRO 21/3		F	145	25	Multiple Footprint			4	110	76	10	39	75	74	70
					25-40	92	6.5								
					60	85	6.5								
MICRO 41/3		F	161	33	Multiple Footprint			4	110	76	10	39	75	74	70
					25-40	92	6.5								
					60	85	6.5								

Model		Drawing	DIMENSIONAL SPECIFICATIONS (mm)												
			C	M	A	B	Ø G	Holes	D	E	F	H	I	L	N
50Hz	60Hz		50Hz	50Hz				N°							
MICRO 3/3 M		F	145	25	Multiple Footprint			4	110	76	10	39	75	74	70
					25-40	92	6.5								
					60	85	6.5								
MICRO 6/3 M		I	145	25	Multiple Footprint			4	90	76	10	39	75	74	70
					25-40	75	6.5								
					-	-	-								
MICRO 21/3 M		F	145	25	Multiple Footprint			4	110	76	10	39	75	74	70
					25-40	92	6.5								
					60	85	6.5								
MICRO 41/3 M		F	161	25	Multiple Footprint			4	110	76	10	39	75	74	70
					25-40	92	6.5								
					60	85	6.5								

NOTE: Dimensions with coarse degree of accuracy related to UNI 22768/1

This information is provided without warranty, representation, inducement or licence of any kind. It is accurate to the best OLI knowledge or is obtained from sources believed to be accurate. OLI therefore assumes no legal responsibility.